EXPLOSION PROOF

ZERON
NEW LIGHT NEW LIFE

Explosion Proof Zeron

OHBF8236

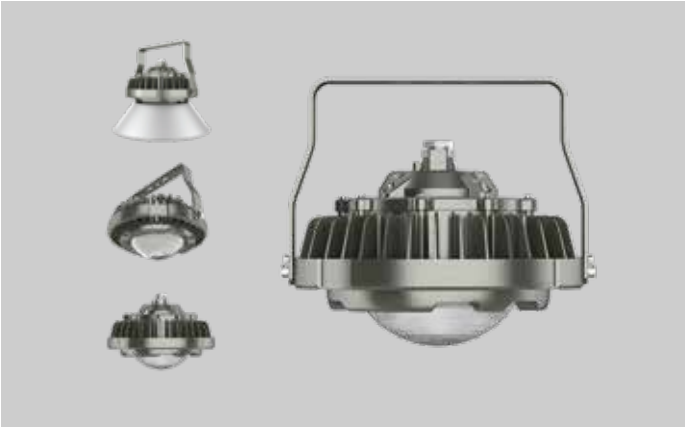

Specification

Executive Standart	Rated Power	Rated Voltage	Weight	Size	Color Rendering	Power Factor	Beam Angle	Protection Level
GB3836.1 GB3836.2	100W 120W 150W	AC100-270V 50/60Hz	10.8kg	ø378X242MM	≥75Ra	>0.95	94.1°	IP66

Anticorrosion Grade	Light Effect	Introduction Device	Explosion Proof Mark
WF2	120Lm/W	G3/4"ø8MM-ø14MM	Ex d IIC T6 Gb/Ex TD A21 T80°C

Dimension (mm)

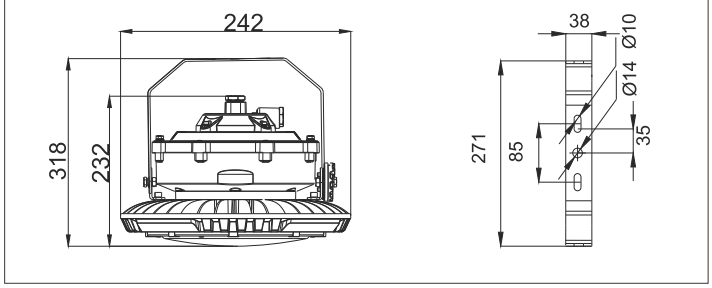

Light Distribution Curve

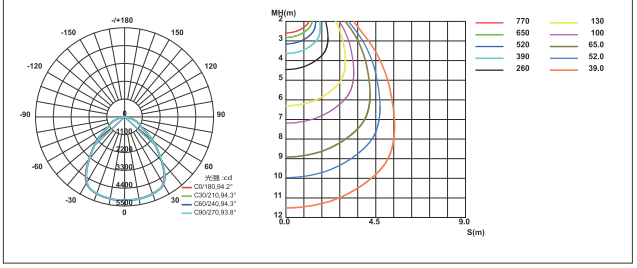
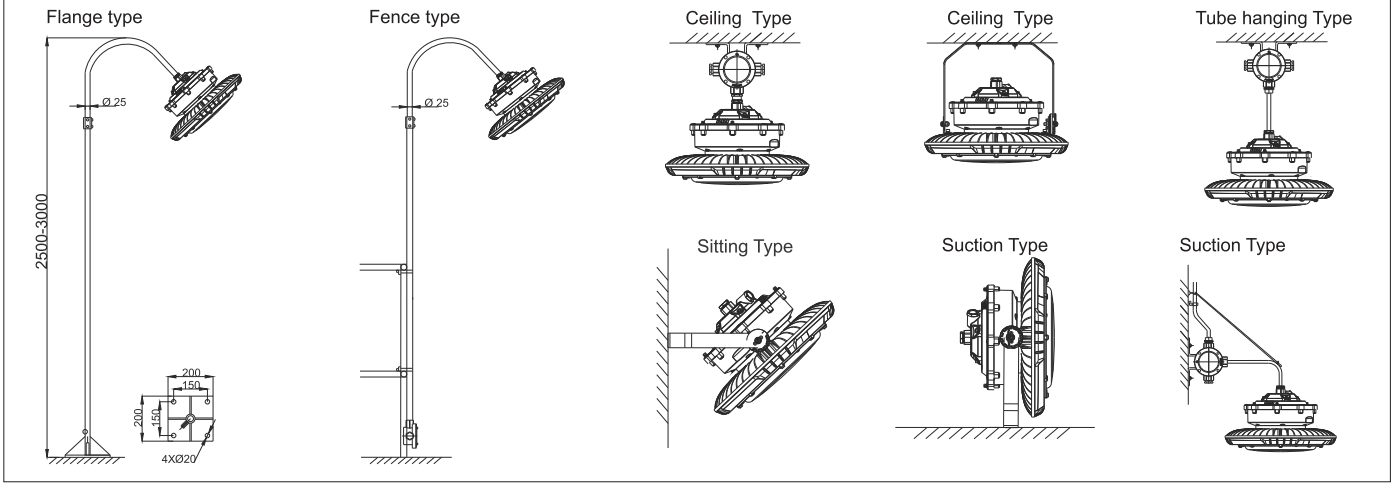
Installation Mode